DECA Lab Logbook — Spring Term

Lab 2 | Task 2: Jump Conditions

Task 2: Jump Conditions

Objectives

- Implement the missing jump condition logic for JMPOPC = 4, 5, 6 in the cond sheet
- Verify the implementation using an Issie algebraic truth table

Task 2. In the cond sheet replace the existing constant '1' connection at MUX1 inputs by appropriate logic to implement the jump conditions for JMPOPC = 4, 5, 6. Show that your logic is correct by using an Issie algebraic truth-table.

Required Jump Conditions

JMPOPC	Mnemonic	Condition	Boolean Expression
4	JGE	Signed Greater or Equal	$\overline{N} \oplus V$
5	JGT	Signed Greater Than	$(\overline{N} \oplus V) \cdot \overline{Z}$
6	JHI	Unsigned Higher	$C \cdot \overline{Z}$

Logic Implementation

The three expressions are implemented in the COND sheet and connected to the corresponding MUX1 inputs (positions 4, 5, 6):

- JMPOPC = 4 (JGE): XNOR gate on FLAGN and FLAGV. Output is 1 when N = V (no signed overflow relative to comparison direction).
- JMPOPC = 5 (JGT): AND gate combining the JGE expression (FLAGN XNOR FLAGV) with NOT FLAGZ. Output is 1 when the result is strictly greater (not equal and not less).
- JMPOPC = 6 (JHI): AND gate combining FLAGC with NOT FLAGZ. Output is 1 when the carry is set (unsigned higher or same) and Z is clear (not equal), confirming strictly unsigned higher.

The circuit diagram is on the next page.

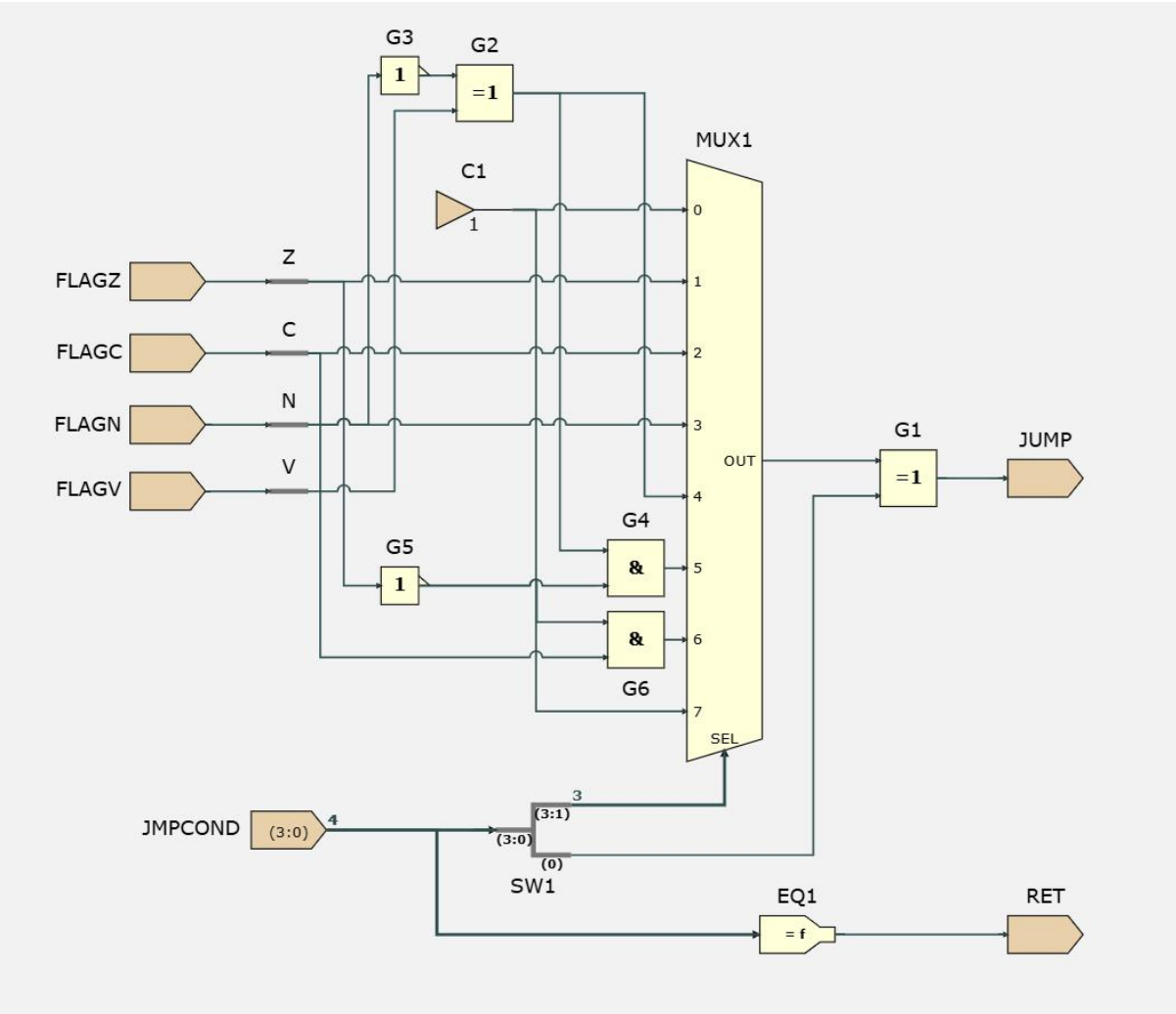

Verification — Algebraic Truth Table

JMPOPC is the three most significant bits of JMPCOND(3:1), used as the MUX select. The simulation selects the MUX inputs, the SEL signal, and the MUX output, setting flag inputs to algebraic. The truth table confirms:

SEL	FLAGZ	FLAGV	FLAGC	FLAGN	OUT
x4	$FLAGZ$	$FLAGV$	$FLAGC$	$FLAGN$	$\overline{FLAGN} \oplus FLAGV$
x5	$FLAGZ$	$FLAGV$	$FLAGC$	$FLAGN$	$\overline{FLAGN} \oplus FLAGV \cdot \overline{FLAGZ}$
x6	$FLAGZ$	$FLAGV$	$FLAGC$	$FLAGN$	$\overline{FLAGZ} \cdot FLAGC$

The outputs match the required Boolean expressions for JGE, JGT, and JHI, confirming the implementation is correct.